ELECTROLUX HOME PRODUCTS PTY LTD
ABN 51 004 762 341

Technical Publication Nº CE1095	**Issue: 1** **Date: 6/19**

WESTINGHOUSE

ELECTRIC UNDERBENCH OVENS

MODEL	PNC
WVE617S	94403169022
	94403169025
WVE617W	94403169122
	94403169125

© Copyright 2019 ELECTROLUX HOME PRODUCTS PTY LTD Technical Services

MODEL: WVE617S WVE617W

EX. VIEW DRAWING 7714
FRONT FRAME ASSEMBLY

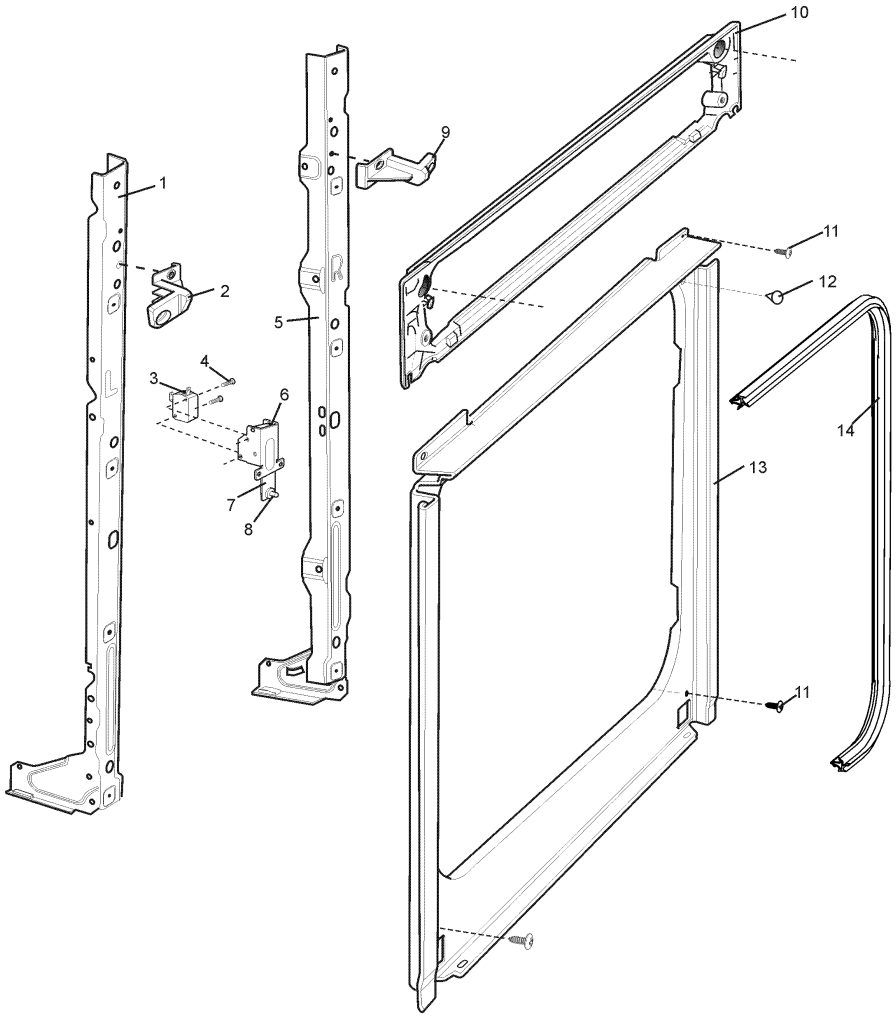

MODEL: WVE617S WVE617W

EX. VIEW DRAWING 7599
CHASSIS ASSEMBLY

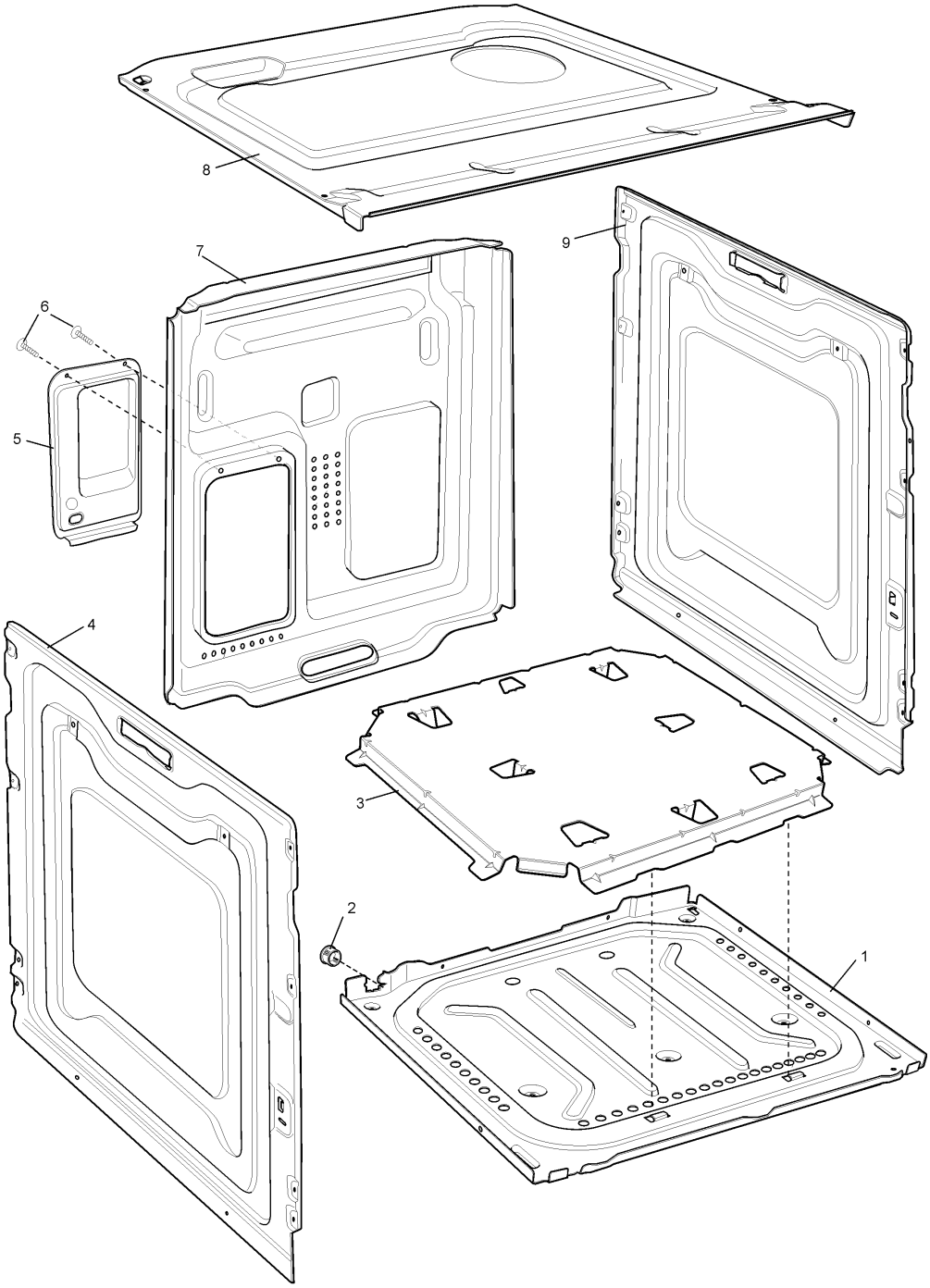

MODEL: WVE617S **WVE617S** **WVE617W** **EX. VIEW DRAWING 8127**

OVEN ASSEMBLY

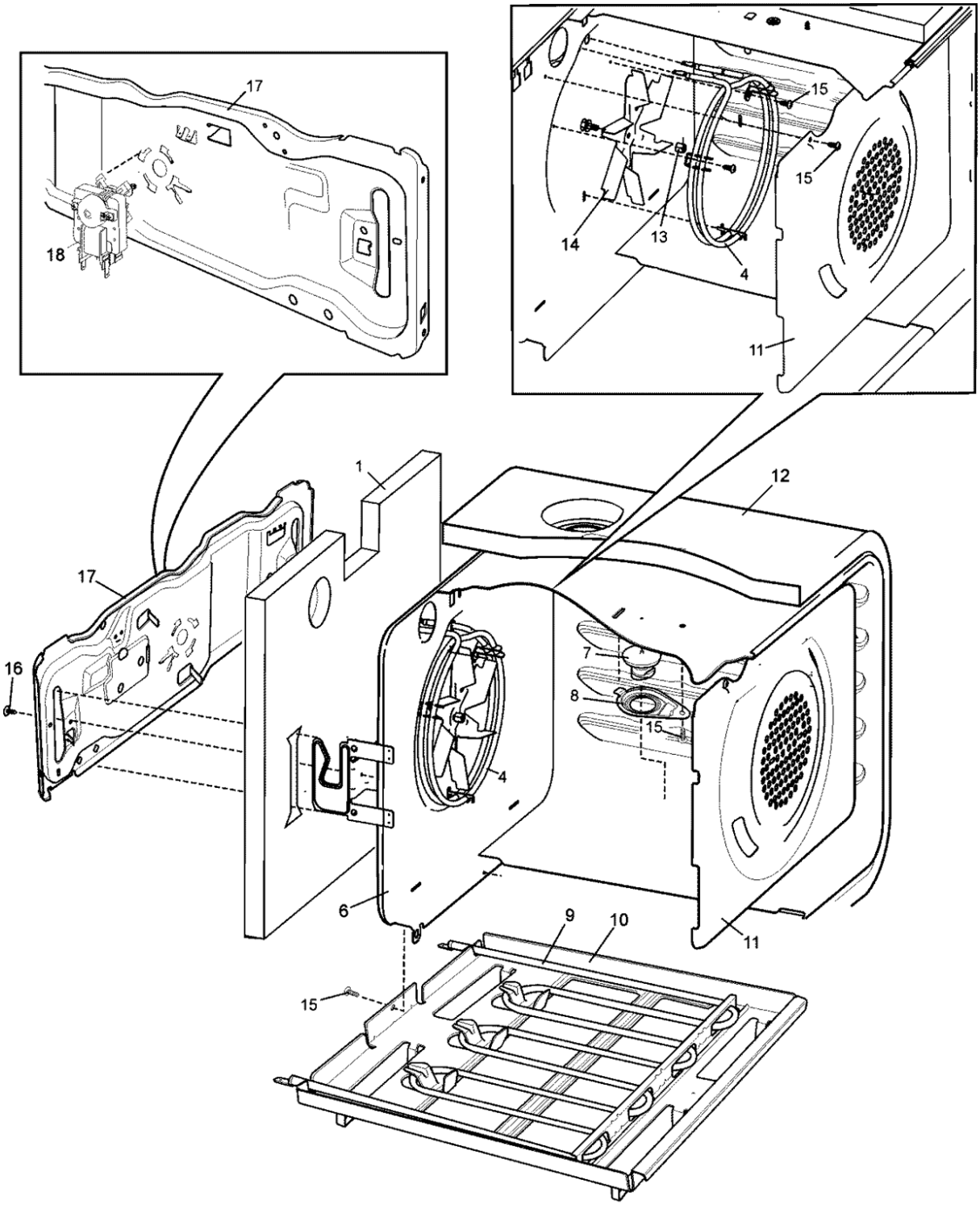

MODEL: WVE617S WVE617W

EX. VIEW DRAWING 8184
PANEL DECK ASSEMBLY

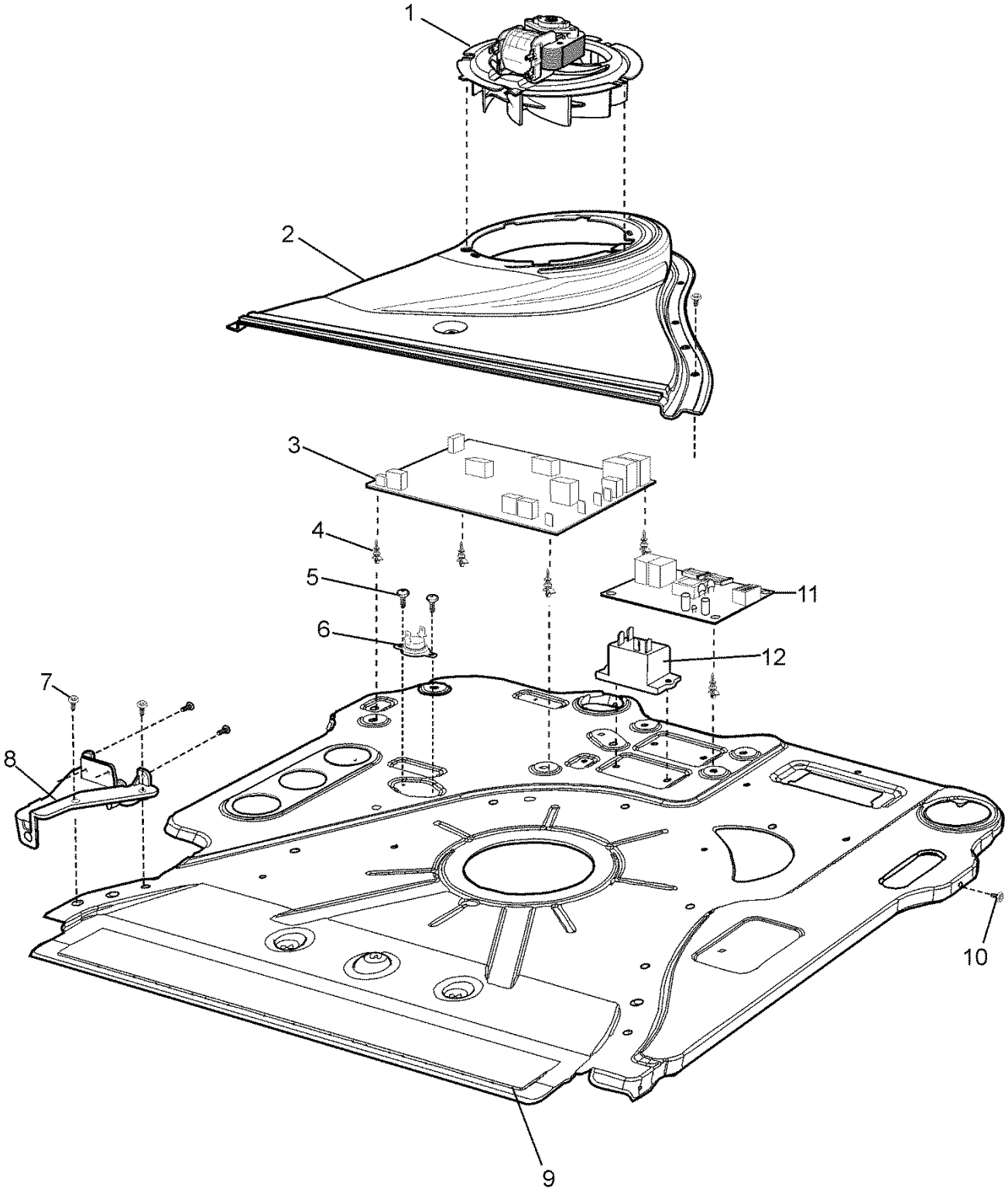

MODEL: WVE617S WVE617W

EX. VIEW DRAWING 8051
OVEN DOOR ASSEMBLY

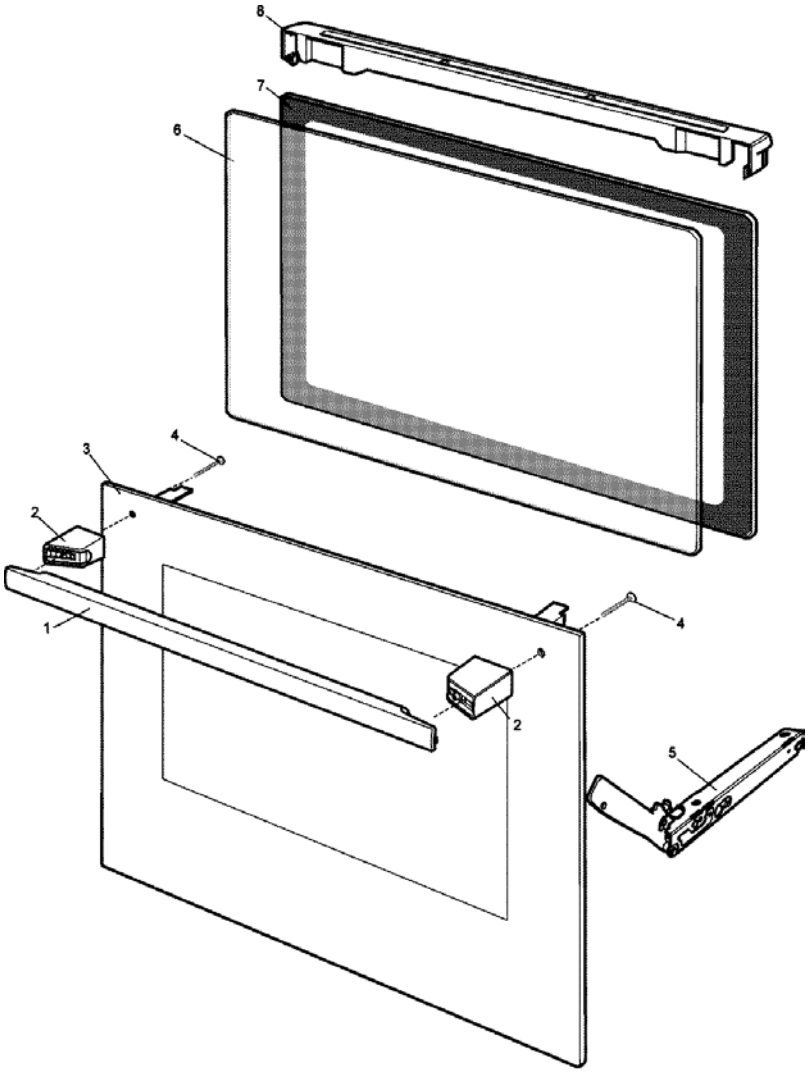

MODEL: WVE617S WVE617W

EX. VIEW DRAWING 8186
CONTROL PANEL ASSEMBLY

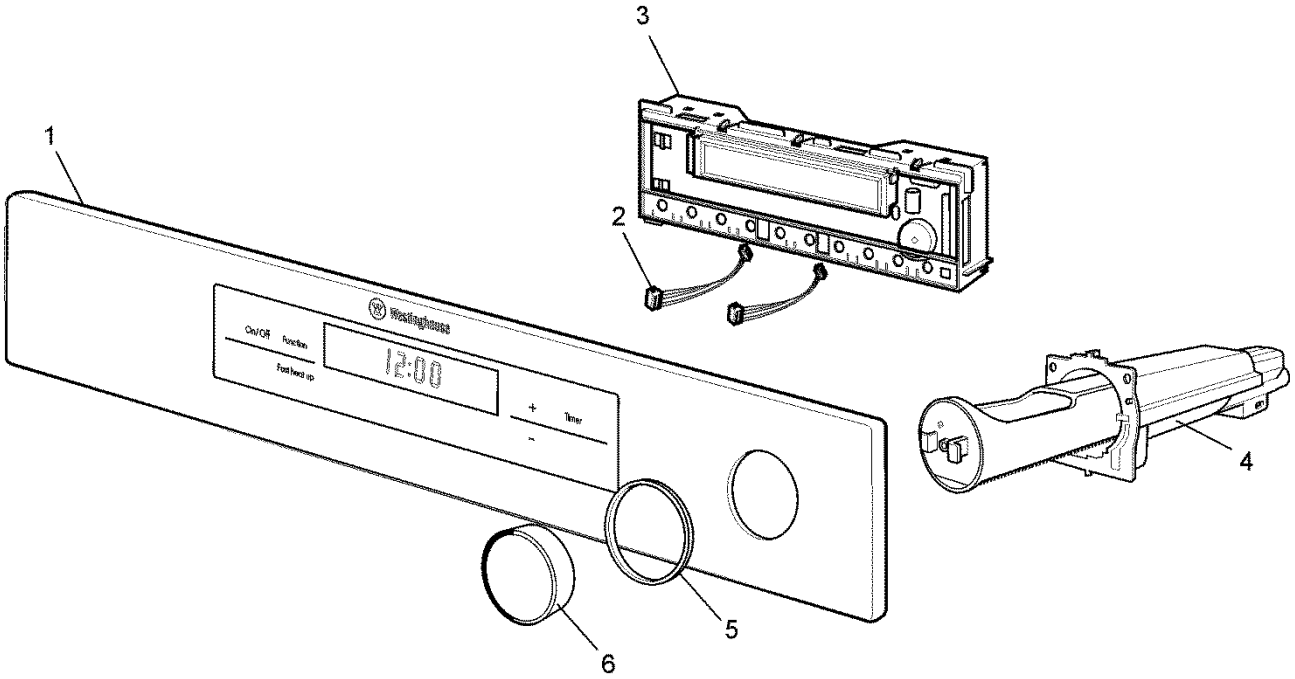

MODEL: WVE617S WVE617W EX. VIEW DRAWING 8126

STEAM COMPONENT ASSEMBLY

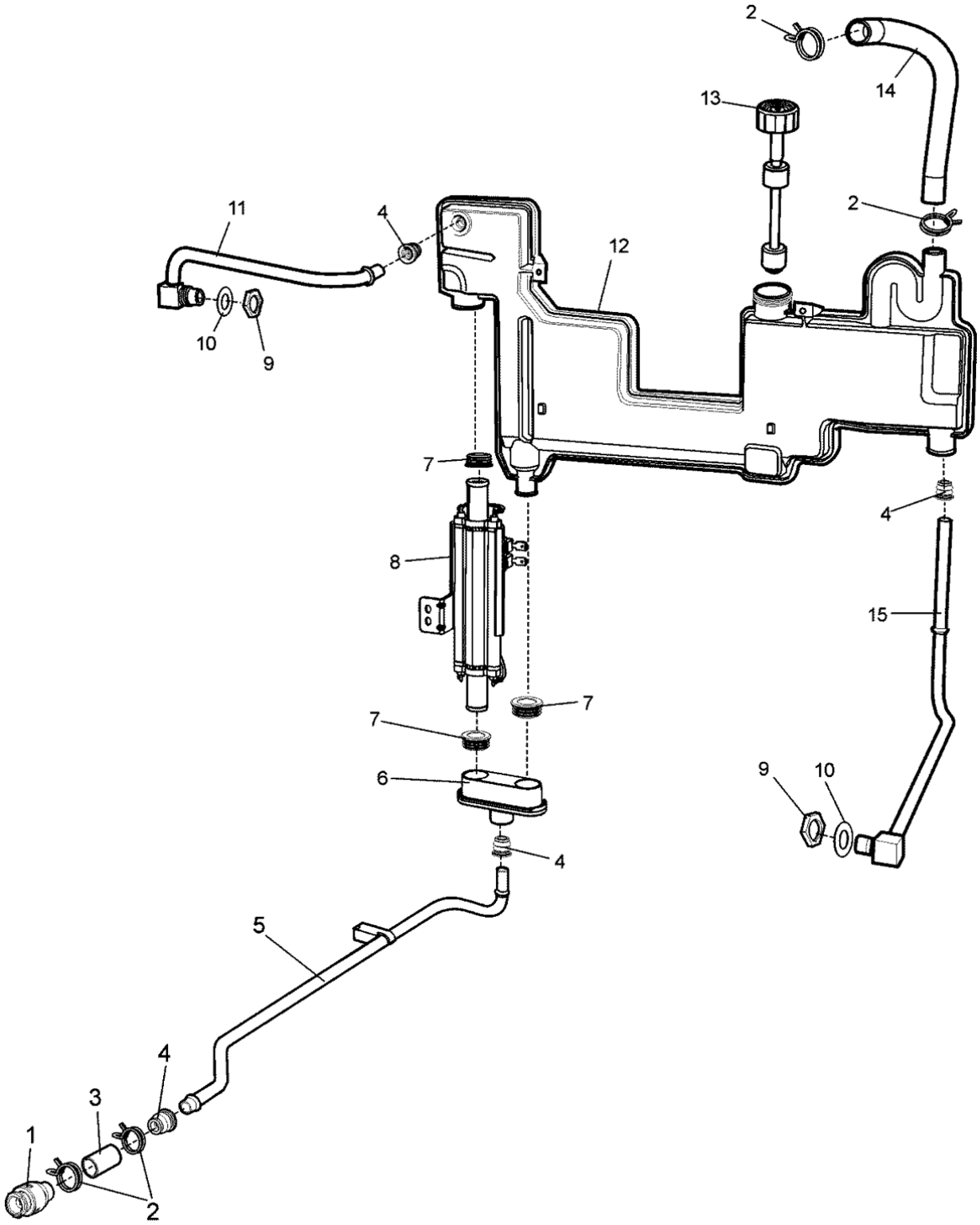
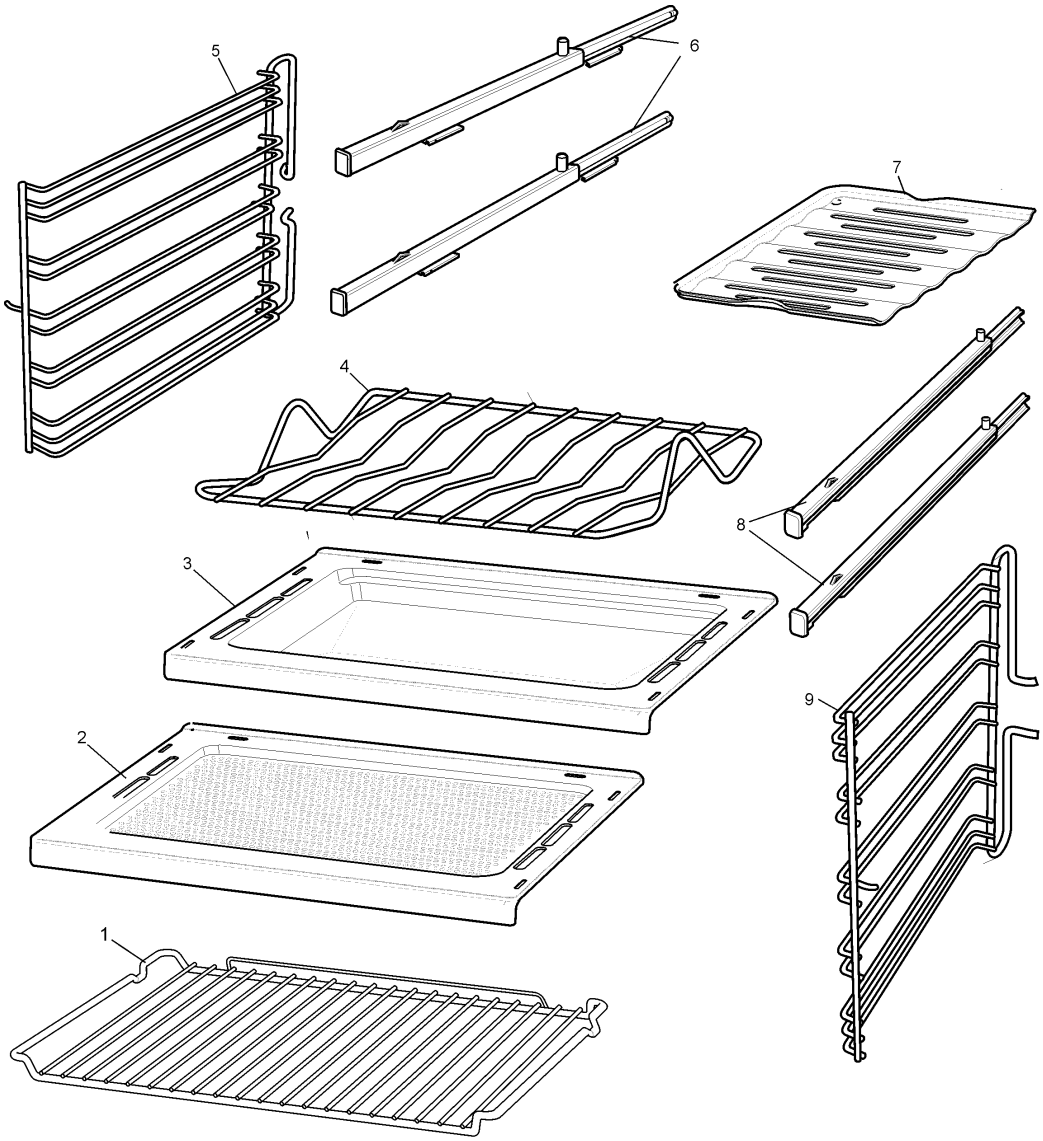
MODEL: WVE617S WVE617W EX. VIEW DRAWING 7720
INTERNAL PACK